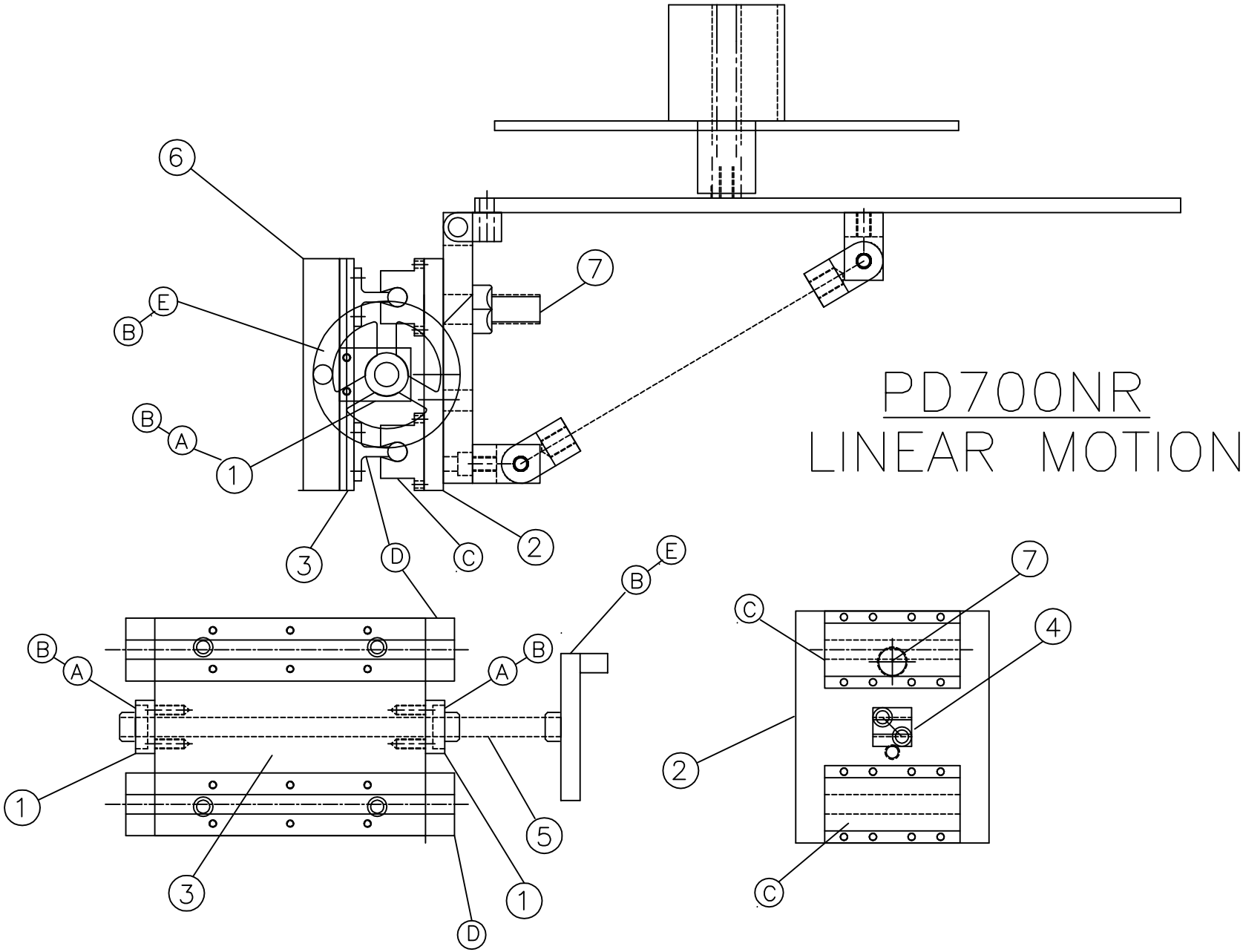
PD700NR
LINEAR MOTION
6
7
E
B
B
A
1
3
D
C
2
E
B
B
A
A
B
1
3
D
1
5
7
C
4
2
C